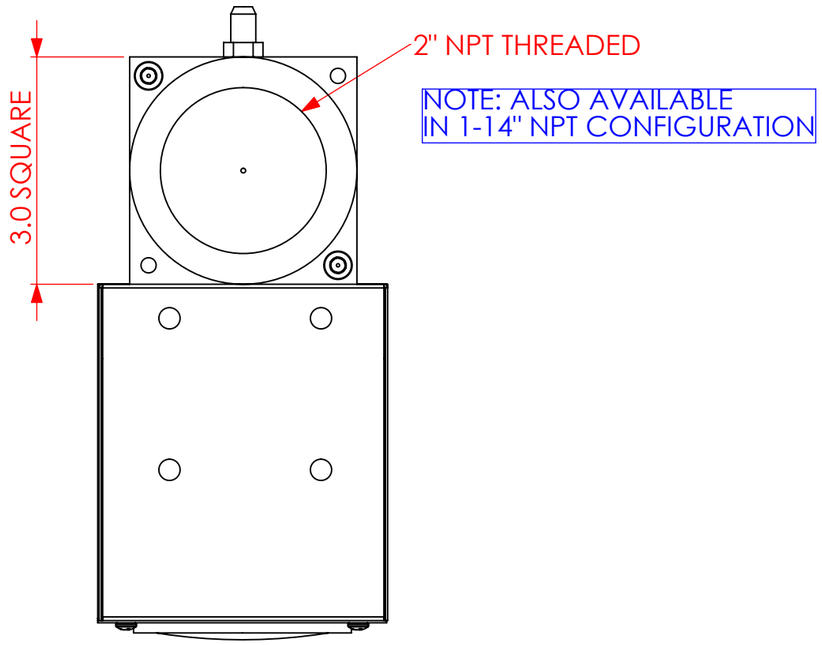

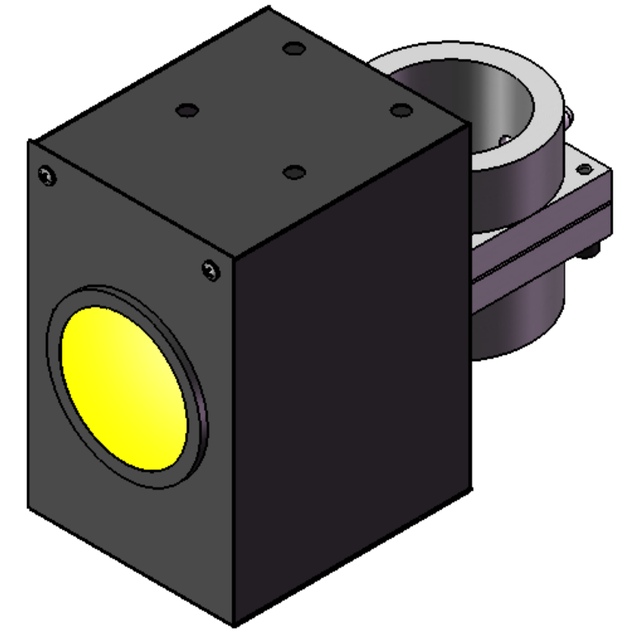

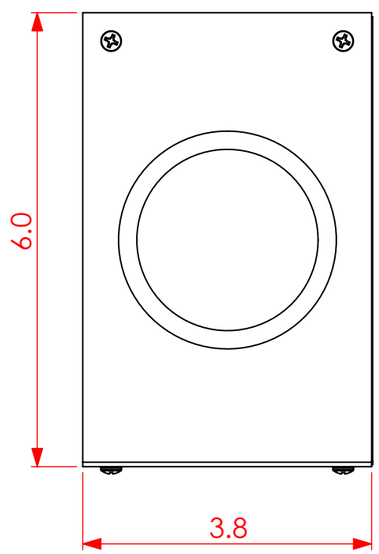

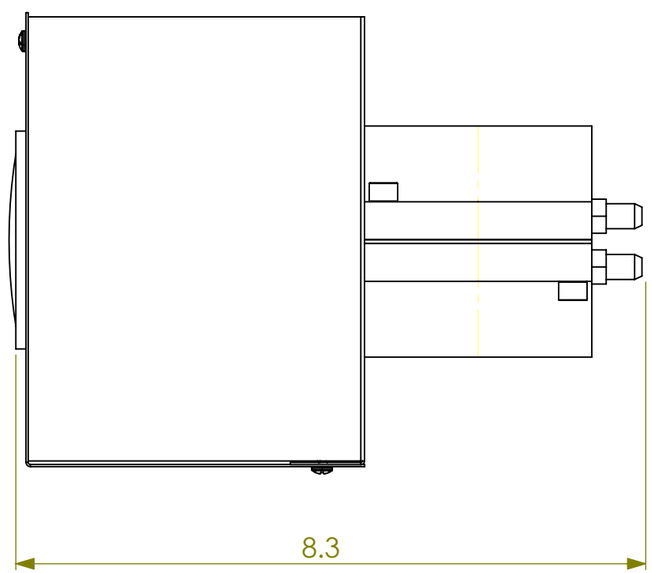

REV. ID	REVISION	DATE	INITIAL	REV #
--	--	--/--/--	--	--
--	--	--/--/--	--	--
--	--	--/--/--	--	--

PROPRIETARY AND CONFIDENTIAL
THE INFORMATION CONTAINED IN THIS DRAWING IS THE SOLE PROPERTY OF ATMOSPHERE ENGINEERING. ANY REPRODUCTION IN PART OR AS A WHOLE WITHOUT THE WRITTEN PERMISSION OF ATMOSPHERE ENGINEERING IS PROHIBITED.

DIMENSIONS ARE IN INCHES
TOLERANCES:
.XX ±.01
.XXX ±.005
.XXXX ±.0005

MATERIAL
ASSEMBLY

FINISH
ASSEMBLY

	NAME	DATE
DRAWN	DJR	7/23/09
CHECKED	--	--

COMMENTS:

SCALE:1:2

ATMOSPHERE ENGINEERING
MILWAUKEE, WISCONSIN U.S.A.
WWW.ATMOSENG.COM
ENGINEERING@ATMOSENG.COM

SIZE B | DWG. NO. FM-GAS-FLOW-AST | REV. 0